Project:_____ Type:_____ Signature: _____

TERALyte™ 2” | Order Specification Guide

TERALyte™

Product Name	LED/K Color	Light Output	Length	Grid Type	Optic	Mounting Clips	Color	Driver
☐ TRL2 = TERALyte 2”	☐ HW = 3000K ☐ MW = 3500K ☐ MN = 4000K ☐ CN = 5000K	☐ LO = Low Output ☐ MO = Medium Output ☐ HO = High Output ☐ VO = Very High Output Custom lumen outputs available, consult factory.	☐ 2 = 2 ft ☐ 4 = 4 ft	☐ DM = Armstrong Dynamax ☐ O = Other	☐ DWS = Diffused White Square	☐ B38 = 3/8” Threaded Bottom Slot ☐ B12 = 1/2” Threaded Bottom Slot ☐ S = Strut Mount ☐ C = Custom	☐ W = White ☐ B = Black ☐ C = Custom	☐ UNV = 120-277 VAC 0-10V dimming ☐ DAL = 120-277 VAC DALI 2 dimming ☐ DC = Acuity DC2DC 57V[1] ☐ 347 = 347 VAC 0–10Vdimming ☐ POE = Power over Ethernet[1] Optional Battery Backup Kit Available (sold separately)

www.jlc-tech.com/patents

[1] Consult factory

Diffused White Square Lens (DWS)



NOTES:

TERALyte 2” is designed for a simple and seamless installation with heavy duty extruded aluminum suspension ceiling systems. All static white options are 90 CRI standard.

APPLICATIONS:

Data centers and critical infrastructure applications using extruded aluminum structural grid suspension ceiling systems.

MOUNTING:

Mounting brackets for easy installation into the bottom extruded screw boss of the grid ceiling system. Remote LED driver simply installs onto the back extruded screw boss. Compatible with Tegular and Lay-in tiles.

MATERIALS:

Painted aluminum extruded body, steel mounting clips, painted aluminum end caps, high transmitting acrylic PMMA lens.

ELECTRIC:

Universal input voltage of 120–277VAC. Remote junction box provided with integral driver for connection to branch circuit and dimmining system (dimming to 1%). Fixture must be installed in accordance with local electrical codes.
For Battery Backup Kit order separately.

WARRANTY:

5 years

LISTINGS:

ETL/cETLus CE RoHS. Indoor use only.
BAA and BABA available.

©2022–2026 JLC-Tech LLC, All Rights Reserved. JLC-Tech LLC reserves the right to make any design changes for continuous improvement which will not affect the overall appearance or performance. Please always refer to our web site for latest technical product information.

MADE IN USA

Photometrics

CRI = >90 R9>70 L_{80} > 60K hrs *(Data at 4000K)*

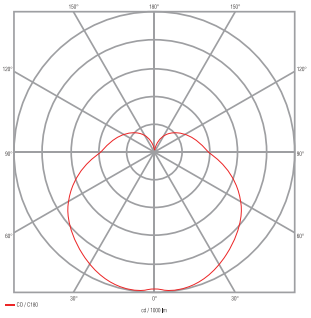

Diffused White Square 4000K

Light Output	Output (lm/ft)	Power (watts/ft)	Efficacy (lm/W)
LO = Low	650	4.7	136
MO = Medium	1000	7.5	131
HO = High	1250	9.4	132
VO = Very High	1750	14.2	123

Profile Dimensions

(Compatible with Tegular and Lay-in tiles)

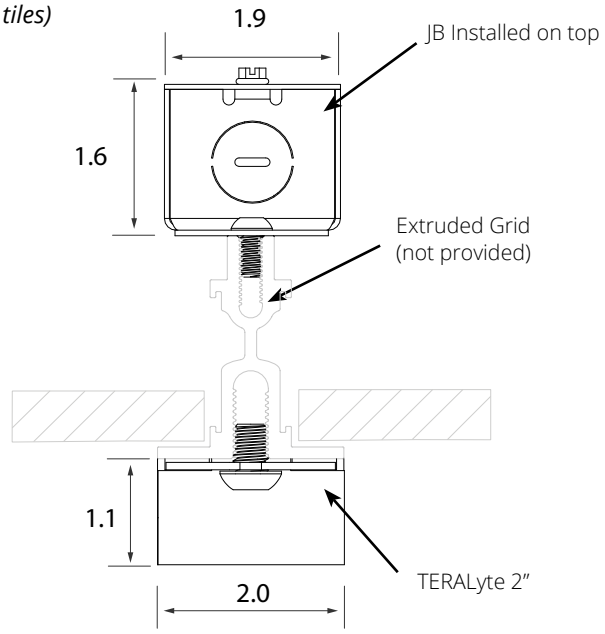

Length Dimensions

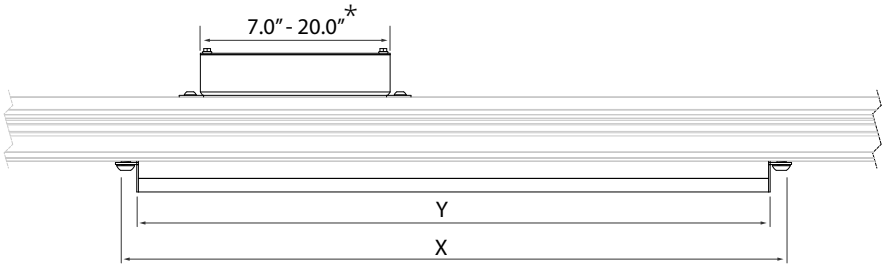

Size	X	Y
2 = 2ft	24"	23"
4 = 4ft	48"	47"

* Junction box length is 7" with most standard universal input 0-10V dimming options, and 20" for "VO" option. Junction box length may vary for other controls options. For other drivers options, refer to the controls guides on website for more information.

©2022–2026 JLC-Tech LLC, All Rights Reserved. JLC-Tech LLC reserves the right to make any design changes for continuous improvement which will not affect the overall appearance or performance. Please always refer to our web site for latest technical product information.

MADE IN USA