Project:_____ Type:_____ Signature:_____

TERALyte™ 1” | Order Specification Guide

TERALyte™

Product Name	LED/K Color	Light Output	Grid Size	Grid Type	Optic	Mounting Clips	Color	Driver	Options
☐ TRL1 = TERALyte 1”	☐ HW = 3000K ☐ MW = 3500K ☐ MN = 4000K ☐ CN = 5000K	☐ LO = Low Output ☐ MO = Medium Output ☐ HO = High Output ☐ VO = Very High Output Custom lumen outputs available, consult factory.	☐ 2 = 2 ft ☐ 4 = 4 ft Metric ☐ 6 = 60 cm ☐ 12 =120 cm	☐ 24 = 15/16	☐ DW = Diffused White Round ☐ DWS = Diffused White Square	☐ A = Armstrong Prelude XL Max ☐ U = Universal	☐ W = White ☐ C = Custom	☐ UNV = 120-277 VAC 0-10V dimming ☐ DAL = 120-277 VAC DALI 2 dimming ☐ DC = Acuity DC2DC 57V[1] ☐ 347 = 347 VAC 0–10V dimming ☐ POE = Power over Ethernet[1] Remote mount driver option available, consult factory.	☐ CP = Chicago Plenum ☐ IP = IP65 ☐ LA = Lutron Athena Wireless Node ☐ NW = nLight® Wired ☐ NA = nLight® Air[1] Optional Battery Backup Kit available (sold separately).

www.jlc-tech.com/patents

[1] Consult factory

Diffused White Round Lens (DW)



Diffused White Square Lens (DWS)

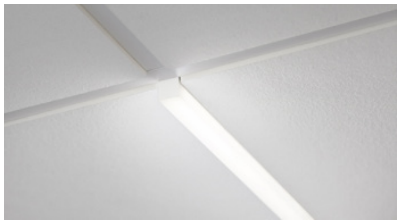

NOTES:

TERALyte 1” is a high efficiency LED fixture designed specifically for integration into 15/16” suspension systems used in data centers and other critical infrastructure environments. TERALyte 1” installation simply replaces cross tees in the grid ceiling assembly. All static white options are 90 CRI standard.

APPLICATIONS:

Data centers and other critical infrastructure applications using 15/16” suspended grid ceiling systems.

MOUNTING:

Armstrong compatible mounting clips for installation with Armstrong Ceilings 15/16” Prelude XL or XL Max suspension systems. Universal mounting brackets are for easy installation to standard 15/16” T-Bars of most manufacturers’ ceiling suspension systems. Compatible with Tegular and Lay-in tiles.

MATERIALS:

Anodized aluminum extruded body, steel mounting clips, ABS end caps, high transmitting acrylic PMMA lens.

ELECTRIC:

Universal input voltage of 120–277VAC. Junction box installed on fixture with integral driver for connection to branch circuit and dimming system, (dimming to 1%). Fixture must be installed in accordance with local electrical codes.
For Battery Backup Kit order separately.
For more information on integrated controls options, refer to controls guide on website.

WARRANTY:

5 years

LISTINGS:

ETL/cETLus CE RoHS. Indoor use only. IC rated. IP 40.
IP65 rated option. IP ratings are intended below finished ceiling.
BAA and BABA compliant.

©2022–2026 JLC-Tech LLC, All Rights Reserved. JLC-Tech LLC reserves the right to make any design changes for continuous improvement which will not affect the overall appearance or performance. Please always refer to our web site for latest technical product information.

MADE IN USA

Rev. 45022026

Photometrics

CRI = >90 R9>70 L_{80} > 60K hrs *(Data at 4000K)*

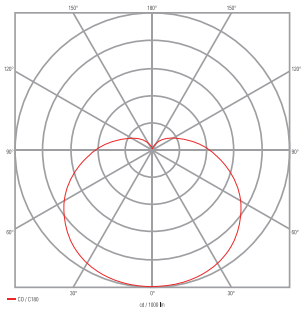

Diffused White Round 4000K

Diffused White Round 4000K

Light Output	Output (lm/ft)	Power (watts/ft)	Efficacy (lm/W)
LO = Low	490	3.2	153
MO = Medium	700	4.9	142
HO = High	1025	7.4	138
VO = Very High	1790	13.5	133

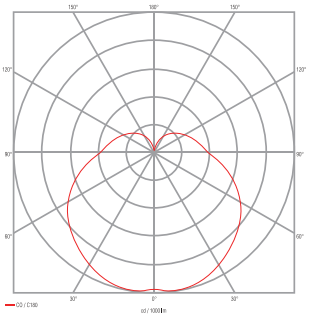

Diffused White Square 4000K

Diffused White Square 4000K

Light Output	Output (lm/ft)	Power (watts/ft)	Efficacy (lm/W)
LO = Low	480	3.2	150
MO = Medium	680	4.9	139
HO = High	1000	7.4	135
VO = Very High	1750	13.5	130

Profile Dimensions

(Compatible with Tegular and Lay-in tiles)

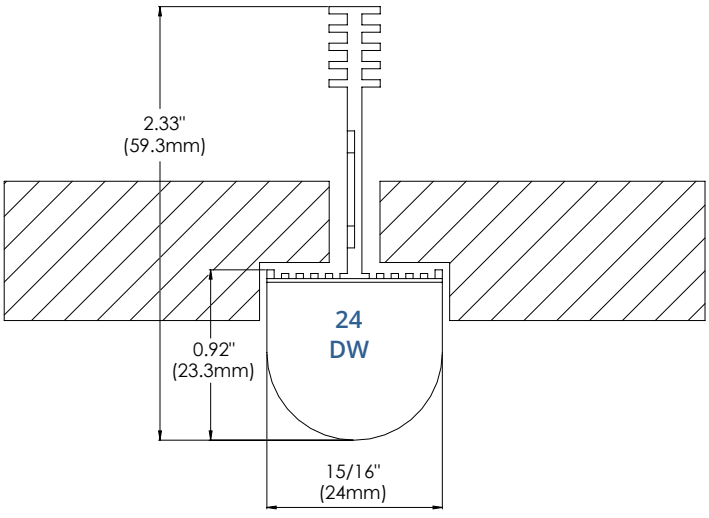

15/16” Diffused White Round Lens
TRL1-XX-XX-X-24-DW-X-X-UNV

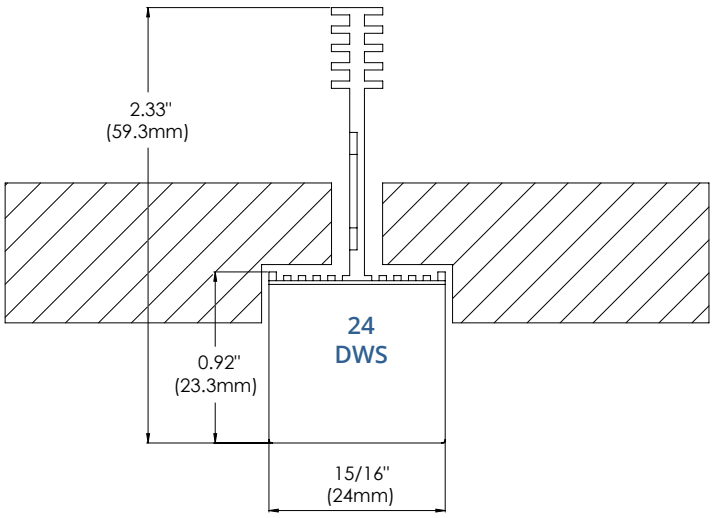

15/16” Diffused White Square Lens
TRL1-XX-XX-X-24-DWS-X-X-UNV

MADE IN USA

©2022–2026 JLC-Tech LLC, All Rights Reserved. JLC-Tech LLC reserves the right to make any design changes for continuous improvement which will not affect the overall appearance or performance. Please always refer to our web site for latest technical product information.

Length Dimensions

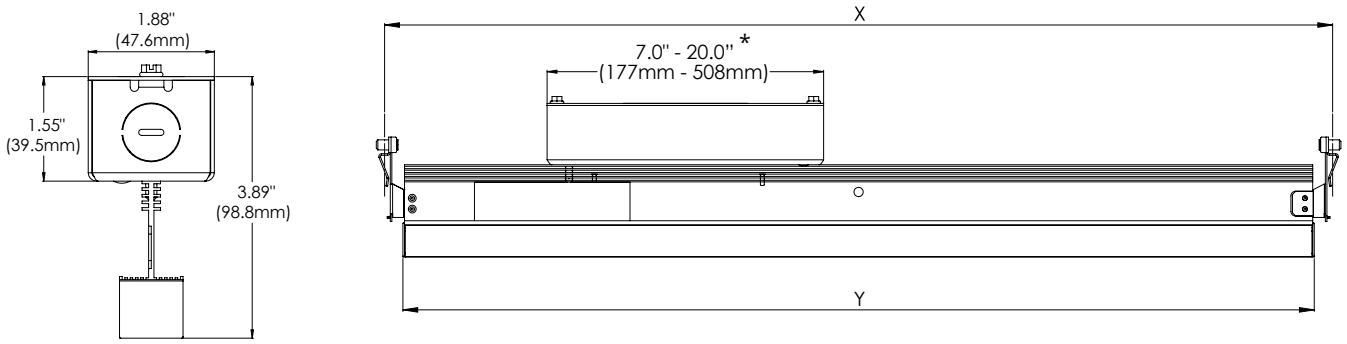

Size	Grid Type	X	Y
2 = 2ft	24 = 15/16”	24”	23”
4 = 4ft	24 = 15/16”	48”	47”

* Junction box length is 7” with most standard universal input 0-10V dimming options, and 20” for “VO” option. Junction box length may vary for other controls options .For other drivers options, refer to the controls guides on website for more information.

MADE IN USA

©2022–2026 JLC-Tech LLC, All Rights Reserved. JLC-Tech LLC reserves the right to make any design changes for continuous improvement which will not affect the overall appearance or performance. Please always refer to our web site for latest technical product information.